Do not use power tools to assemble this chair

1. Loosely Connect all the metal parts.
Do not tighten screws.
Place the base in the upright position
and hand tighten screws.

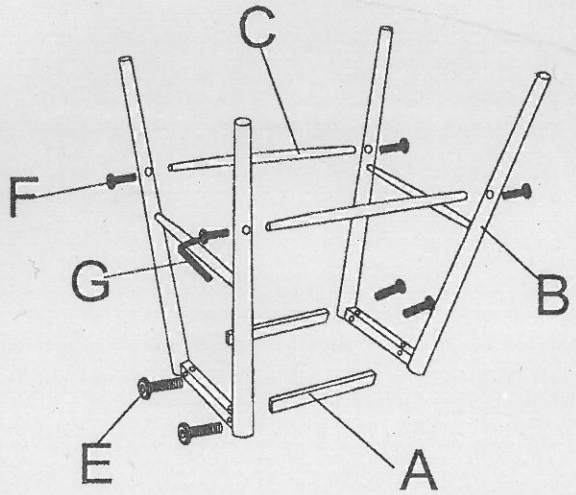

2. Assemble the fixed base to the seat.

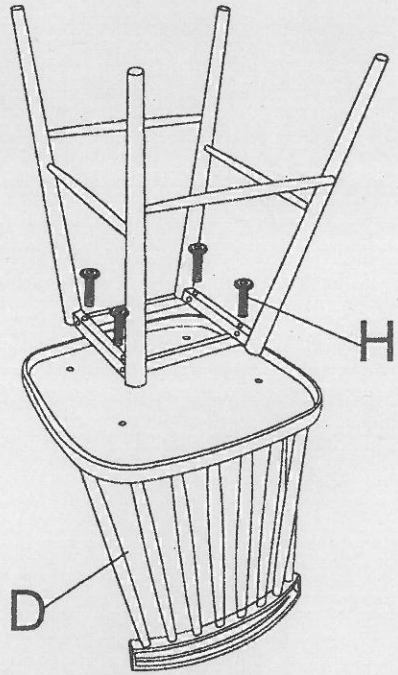

3.

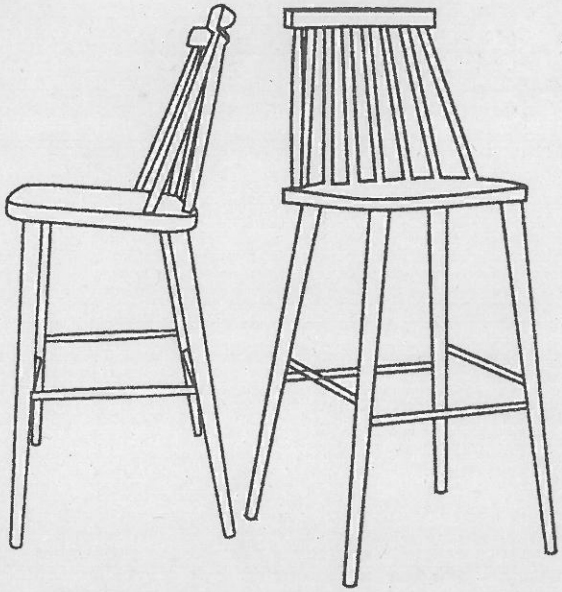

A		2	B	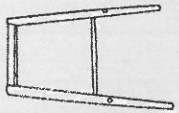	2	C		2	D		1
E	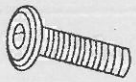 6mm*35mm	4	F	6mm*16mm	4	G		1	H	6mm*12mm	4